Mitsubishi International PolymerTrade Corporation

Transmitters for use with ESKA™ Products: MIC-L99B

Description and Features

The MIC-L99B is a very high-speed red LED housed in a connector-less style plastic fiber optic package. The output spectrum of this red LED is produced by a GaA1As die which peaks at a wavelength of 650 nm, one of the optimum transmission windows of PMMA plastic core optical fiber. The device package features an internal micro-lens and a precision-molded PBT housing, ensuring efficient optical coupling with standard 1000 µm core plastic fiber cable.

Requires no optical design	Excellent linearity
Mates with standard 1000 µm core jacketed plastic fiber optic cable	Light-tight housing provides interference-free transmission
Uses inexpensive plastic connector housing	Internal micro-lens makes for efficient optical coupling
Connector-less fiber termination and connection	Visible light output

Applications

Highlights

The fast transistion times of the MIC-L99B make it suitable for high-speed digital data links When used with an IF-D98 photologic detector and standard 1000µm core plastic fiber, the MIC-L99B can achieve data rates up to 155 Mbps over link distances in excess of 75 m. The wide analog bandwidth permits direct modulation at RF frequencies exceeding 100 MHz. The drive circuit design of the IF-E99 requires good RF and digital design techniques, but is much simpler than that required for laser diodes, making it a good low-cost solution in a variety of high-frequency POF analog and digital data applications.

PC-to-peripheral data links	Isolation from lightning and voltage transicents
Digitized video and HDTV	Motor controller triggering
Automotive electronics	Robotics communications
Medical instruments	Ethernet LANs
Sonet / SDH transmitters	

Maximum Ratings (T_A = 25˚C)

Temperature Range for Operation (T_{OP})	-0˚ to 60˚C
Temperature Range for Storage (T_{STG})	-40˚ to 85˚C
Junction Temperature (T_J)	85˚C
Soldering Temperature (2mm from case bottom) (T_S) t≤5s	240°C
Reverse Voltage (V_R)	5V
Power Dissipation (P_{TOT}) T_A=25˚C	100mW
Forward Current DC (I_F)	40mA
Surge Current (I_{FSM}) t≤10 µsec	100 mA
De-rate above 25°C	1.33 mW/°C

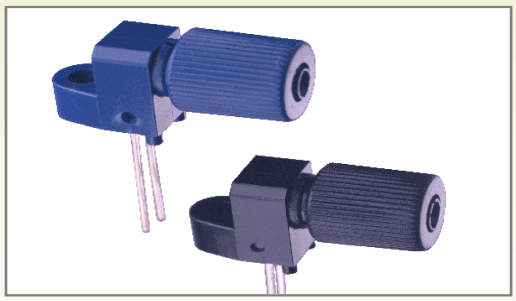

Characteristics (T_A = 25°C)

Parameters	Symbol	Min.	Typ.	Max.	Unit
Peak Wavelength	λ_{PEAK}	640	650	660	nm
Spectral Bandwidth 50% of I_{MAX}	$\Delta\lambda$	--	10	--	nm
Output Power Coupled into Plastic Fiber (1 mm core diameter) Distance of lens to fiber: ≤ 0.1 mm, 1 m SH4001 fiber, I_F=20 mA	Φ_{min}	875 -0.58	950 -0.2	1050 -0.21	µW dBm
Switching TImes 10% to 90% and 90% to 10% R_L= 47Ω, I_F=10 mA	t_r, t_f	--	--	3	ns
Capacitance V_F=0, F=1 MHz	C_O	--	10	--	pF
Forward Voltage **I_F=30mA**	V_f	--	2.05	2.3	V
Cut-off Frequency	f_C	--	100	--	MHz

Mitsubishi International PolymerTrade Corporation

Receivers for use with ESKA™ Products: **MIC-L99B**

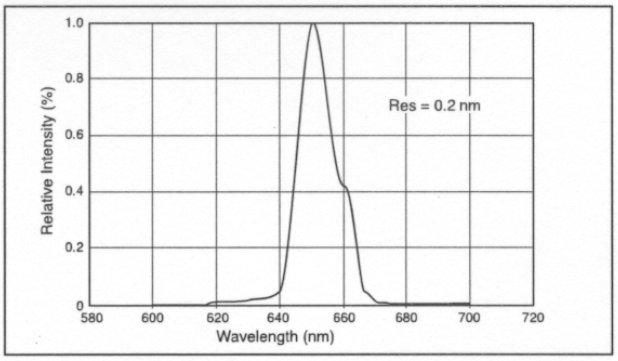

FIGURE 1. Relative intensity versus wavelength.

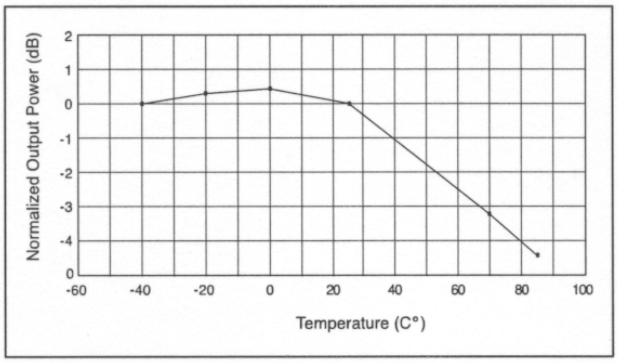

FIGURE 2. Optical Power output versus temperature (I_F =20mA)

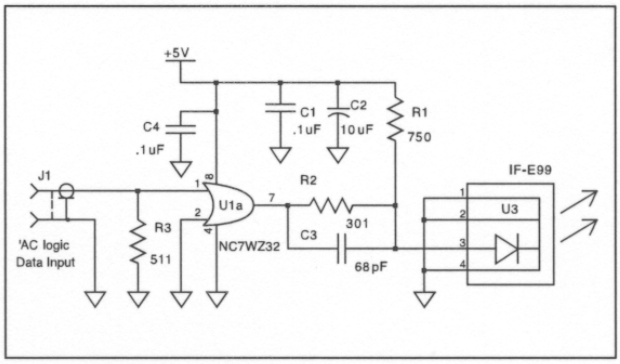

FIGURE 3. Typical interface circuit.

FIBER TERMINATION INSTRUCTIONS

1. Cut off the ends of the optical fiber with a single-edge razor blade or sharp knife. Try to obtain a precise 90-degree angle (square).
2. Insert the fiber through the locking nut and into the connector until the core tip seats against the internal micro-lens.
3. Screw the connector locking nut down to a snug fit, locking the fiber in place.

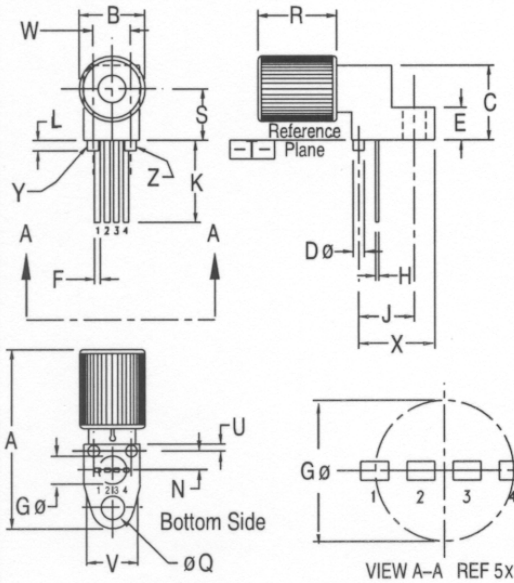

NOTES:
1. Y AND Z ARE DATUM DIMENSIONS AND T IS A DATUM SURFACE.
2. POSITIONAL TOLERANCE FOR D ø (2 PL): ⊕ ø 0.25 (0.010) Ⓜ T Y Ⓜ Z Ⓜ
3. POSITIONAL TOLERANCE FOR F DIM (2 PL): ⊕ 0.25 (0.010) Ⓜ T Y Ⓜ Z Ⓜ
4. POSITIONAL TOLERANCE FOR H DIM (2 PL): ⊕ 0.25 (0.010) Ⓜ T Y Ⓜ Z Ⓜ
5. POSITIONAL TOLERANCE FOR Q ø (2 PL): ⊕ ø 0.25 (0.010) Ⓜ T Y Ⓜ Z Ⓜ
6. POSITIONAL TOLERANCE FOR B (2 PL): ⊕ ø 0.25 (0.010) Ⓜ T
7. DIMENSIONING AND TOLERANCING PER ANSI Y14.5M, 1982.
8. CONTROLLING DIMENSION: INCH

PACKAGE IDENTIFICATION:
- ◆ Blue housing w/ gold dot
- PIN 1. Cathode
- PIN 2. Cathode
- PIN 3. Anode
- PIN 4. Cathode

	MILLIMETERS		INCHES	
DIM	MIN	MAX	MIN	MAX
A	23.24	25.27	.915	.995
B	8.64	9.14	.340	.360
C	9.91	10.41	.390	.410
D	1.52	1.63	.060	.064
E	4.19	4.70	.165	.185
F	0.35	0.51	.014	.020
G	3.81 BSC		.150 BSC	
H	0.18	0.33	.007	.013
J	7.62 BSC		.300 BSC	
K	5.30	6.10	.210	.240
L	1.14	1.65	.045	.065
N	2.54 BSC		.100 BSC	
Q	3.05	3.30	.120	.130
R	10.48	10.99	.413	.433
S	6.98 BSC		.275 BSC	
U	0.83	1.06	.032	.042
V	7.49	7.75	.295	.305
W	5.08 BSC		.200 BSC	
X	10.10	10.68	.397	.427

FIGURE 4. Case outline.

Please visit **www.fiberopticpof.com** to locate a sales representative near you