Mitsubishi International PolymerTrade Corporation

Transmitters for use with ESKA™ Products: MIC-L96

Description and Features

The MIC-L96 is a low-cost, high-speed visible red LED housed in a connector-less style plastic fiber optic package. The output spectrum of the red LED is produced by a GaA1As die which peaks at a wavelength of 660 nm, one of the optimum transmission windows of PMMA plastic core optical fiber. The device package features an internal micro-lens and a precision-molded PBT housing, ensuring efficient optical coupling with standard 1000 µm core plastic fiber cable.

High performance at low cost	Fast transmission times
Mates with standard 1000 µm core jacketed plastic fiber optic cable	Light-tight housing provides interference-free transmission
Uses inexpensive plastic connector housing	Internal micro-lens makes for efficient optical coupling
Connector-less fiber termination	Requires no optical design
Visible red output aids troubleshooting	Low transmission loss with PMMA plastic fiber

Applications

Highlights

The performance/price ratio of the MIC-L96 is particularly attractive for high volume design applications. The visible red output has low attenuation in PMMA plastic fiber and aids in troubleshooting applications. When used with an MIC-D96 photologic detector, the MIC-L96 can achieve data rates up to 5 Mbps. Fast transition times and low attenuation make this product an excellent selection for low-cost analog and digital data links up to 75 meters.

Low-cost analog and digital data links	Intra-system links: Board-to-board, rack-to-rack
Digitized audio	Motor controller triggering
Automotive electronics	Robotics communications
PC-to-peripheral data links	EMC/EMI signal isolation
Medical instruments	Local Area Networks (LANs)

Characteristics (T_A = 25°C)

Parameters	Symbol	Min.	Typ.	Max.	Unit
Peak Wavelength	λ_{PEAK}	650	660	670	nm
Spectral Bandwidth 50% of I_{MAX}	$\Delta\lambda$	--	20	--	nm
Output Power Coupled into Plastic Fiber (1 mm core diameter) Distance of lens to fiber: ≤ 0.1 mm, 1 m SH4001 fiber, I_F=20 mA	Φ_{min}	125 -9.0	200 -7.0	300 -5.2	µW dBm
Switching TImes 10% to 90% and 90% to 10% I_F=20 mA	t_r, t_f	--	.1	--	µs
Capacitance F=1 MHz	C_O	--	30	--	pF
Forward Voltage **I_F=20mA**	V_f	--	--	1.8	V
Temperature Coefficient λ_{PEAK}	TC_λ	--	0.2	--	nm/K

Maximum Ratings (T_A = 25˚C)

Temperature Range for Operation and for Storage (T_{OP},T_{STG})	-40˚ to 85˚C
Junction Temperature (T_J)	85˚C
Soldering Temperature (2mm from case bottom) (T_S) t≤5s	240°C
Reverse Voltage (V_R)	5V
Power Dissipation (P_{TOT}) T_A=25˚C	60mW
Forward Current DC (I_F)	35mA
Surge Current (I_{FSM}) t≤10 µs	150 mA
De-rate above 25°C	1.1 mW/°C

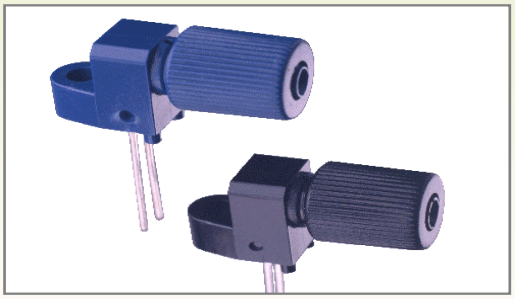

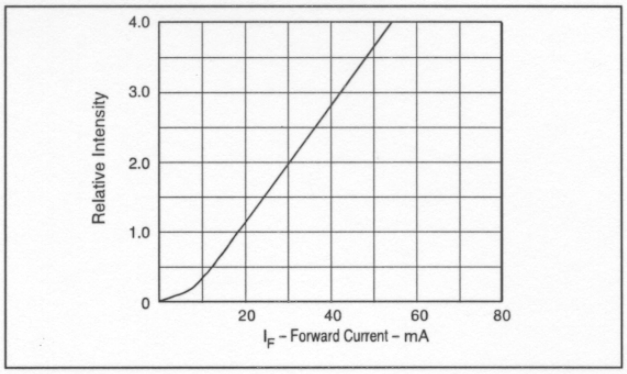

FIGURE 1. Normalized power launched versus forward current.

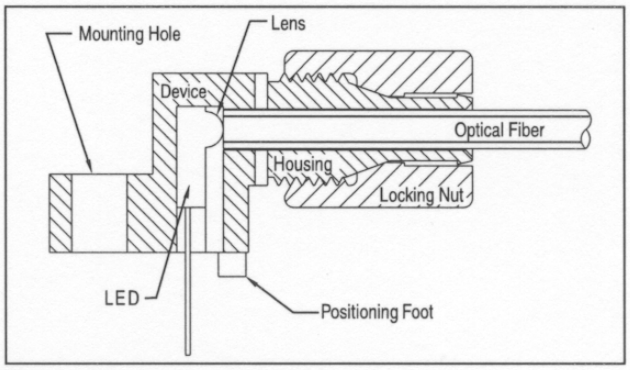

FIGURE 3. Cross-section of fiber optic device.

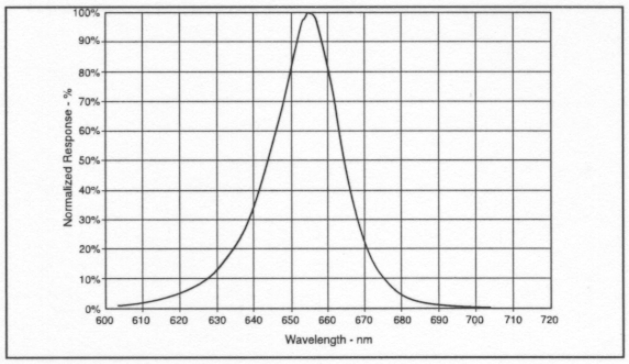

FIGURE 2. Typical spectral output versus wavelength.

FIBER TERMINATION INSTRUCTIONS

1. Cut off the ends of the optical fiber with a single-edge razor blade or sharp knife. Try to obtain a precise 90-degree angle (square).
2. Insert the fiber through the locking nut and into the connector until the core tip seats against the internal micro-lens.
3. Screw the connector locking nut down to a snug fit, locking the fiber in place.

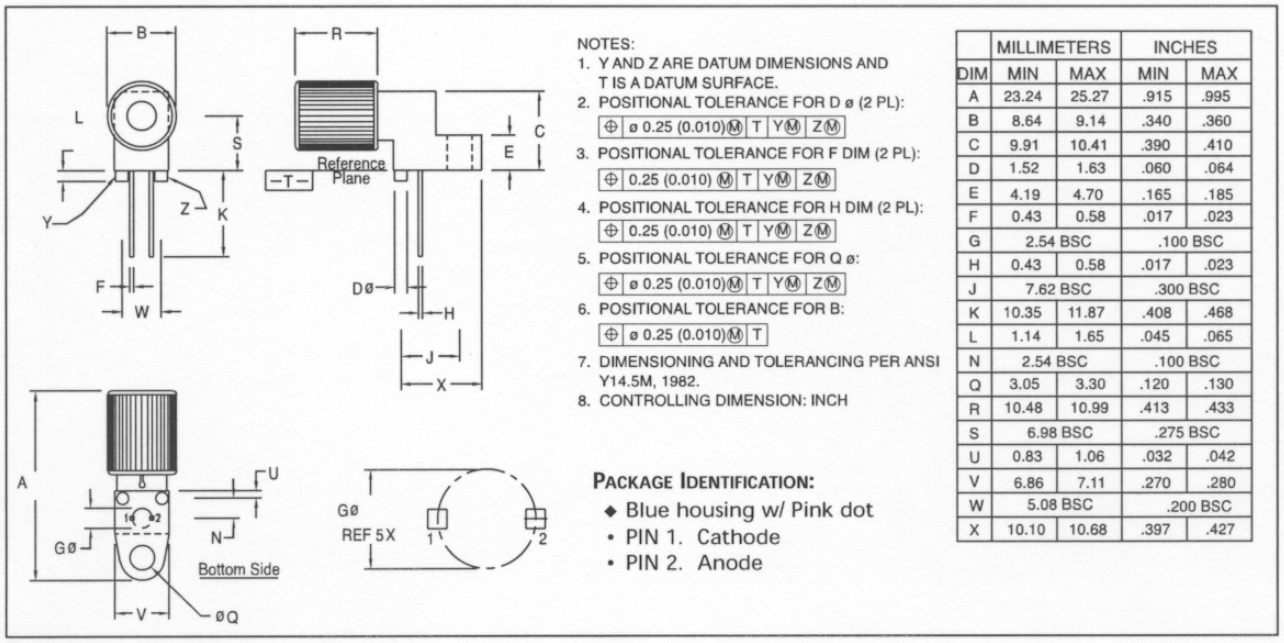

NOTES:
1. Y AND Z ARE DATUM DIMENSIONS AND T IS A DATUM SURFACE.
2. POSITIONAL TOLERANCE FOR D ø (2 PL): ⊕ | ø 0.25 (0.010)Ⓜ | T | YⓂ | ZⓂ
3. POSITIONAL TOLERANCE FOR F DIM (2 PL): ⊕ | 0.25 (0.010) Ⓜ | T | YⓂ | ZⓂ
4. POSITIONAL TOLERANCE FOR H DIM (2 PL): ⊕ | 0.25 (0.010) Ⓜ | T | YⓂ | ZⓂ
5. POSITIONAL TOLERANCE FOR Q ø: ⊕ | ø 0.25 (0.010)Ⓜ | T | YⓂ | ZⓂ
6. POSITIONAL TOLERANCE FOR B: ⊕ | ø 0.25 (0.010)Ⓜ | T
7. DIMENSIONING AND TOLERANCING PER ANSI Y14.5M, 1982.
8. CONTROLLING DIMENSION: INCH

	MILLIMETERS		INCHES	
DIM	MIN	MAX	MIN	MAX
A	23.24	25.27	.915	.995
B	8.64	9.14	.340	.360
C	9.91	10.41	.390	.410
D	1.52	1.63	.060	.064
E	4.19	4.70	.165	.185
F	0.43	0.58	.017	.023
G	2.54 BSC		.100 BSC	
H	0.43	0.58	.017	.023
J	7.62 BSC		.300 BSC	
K	10.35	11.87	.408	.468
L	1.14	1.65	.045	.065
N	2.54 BSC		.100 BSC	
Q	3.05	3.30	.120	.130
R	10.48	10.99	.413	.433
S	6.98 BSC		.275 BSC	
U	0.83	1.06	.032	.042
V	6.86	7.11	.270	.280
W	5.08 BSC		.200 BSC	
X	10.10	10.68	.397	.427

PACKAGE IDENTIFICATION:
- ◆ Blue housing w/ Pink dot
- • PIN 1. Cathode
- • PIN 2. Anode

FIGURE 4. Case outline.