Mitsubishi International PolymerTrade Corporation

Receivers for use with ESKA™ Products: MIC-D98

Description and Features

The MIC-D98 is a very high-speed photologic detector housed in a connector-less style plastic fiber optic package. It contains an IC with a photodiode, linear amplifier and Schmitt trigger featuring a PECL logic-compatible totem-pole output.. Optical response extends from 400 nm to 1050 nm, making it compatible with a wide range of LED and laser diode sources. The detector package features an internal micro-lens and a precision-molded PBT housing, ensuring efficient coupling with standard 1000µm core plastic fiber cable.

Requires no optical design	Totem-pole output
Mates with standard 1000 µm core jacketed plastic fiber optic cable	Light-tight housing provides interference-free transmission
Uses inexpensive plastic connector housing	Internal micro-lens makes for efficient optical coupling
Connector-less fiber termination and connection	

Applications

Highlights

This product's fast transition times make it suitable for high-speed digital data links. Link distances in excess of 75 meters at data rates of 155 Mbps are possible using standard 1000 µm core plastic fiber and an MIC-E99 LED. The MIC-D98's integrated design makes it a simple, cost-effective solution in a variety of digital applications.

PC-to-Peripheral links	Automotive electronics
Motor controller triggering	Robotics communication
Ethernet LANs	Sonet/SDH receivors
Isolation from lightning and voltage transients	Digitized video and HDTV
	Medical instruments

Characteristics (T_A = 25°C)

Parameters		Symbol	Min.	Typ.	Max.	Unit
Peak Sensitivity		λ_{PEAK}	--	800	--	nm
Spectral Sensitivity S=10% of S_{MAX}		Δ λ	400	--	1050	nm
Operating Voltage		V_{CC}	4.75	5	5.25	V
Light Required to Trigger[1,2,3,4,5] V_{CC}=5V, λ=660nm		Er (+)	--	6.3 -22	--	µW dBm
High Level[1,2,5] **Output Voltage**	I_{OH}=-2.0µA	V_{OH}	3.9	--	4.3	V
Low Level[1,2,5] **Output Voltage**	I_{OL}=.6 mA	V_{OL}	2.9	--	3.4	V
Output Rise and Fall Times[1,2,5] F=10.0 kHz, R_L= 10 TTL loads		t_r, t_f	--	--	3	ns
Data Rate[6,7]		f_D	4	--	156	Mbps
Pulse Width Distortion		Δt	-3	--	3	ns
Jitter		Δtj	--	--	3	ns
Supply Current		I_{CC}	--	--	40	mA

Maximum Ratings (T_A = 25˚C)

Temperature Range for Operation (T_{OP})	-20˚ to 70˚C
Temperature Range Storage (T_{STG})	-40˚ to 85˚C
Soldering Temperature (2mm from case bottom) (T_S) t≤5s	240°C
Supply Voltage (V_S)	.5 -- 7 V
Power Dissipation (P_{TOT}) T_A=25˚C	250 mW
De-rate above 25°C	1.7 mW/°C

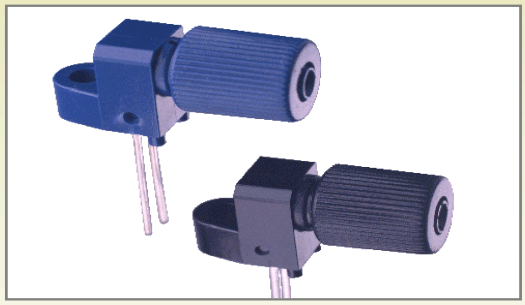

1. Input signal at 156 Mbps (bi-phase signal)
2. 3 pF capacitor as load (including parasitic capacitance, such as probes, connectors and PCB patterns)
3. Opitcal input waveform generated with IF-E99 LED
4. Average value, measured using plastic fiber (MH-4001, manufactured by Mitsubishi Rayon)
5. 3 kΩ resistor externally connected to Q and Q
6. Bi-phase signal; NRZ conversion
7. No transition with DC light, no light, and modulated light below 4 Mbps

Mitsubishi International PolymerTrade Corporation

Transmitters for use with ESKA™ Products: MIC-D98

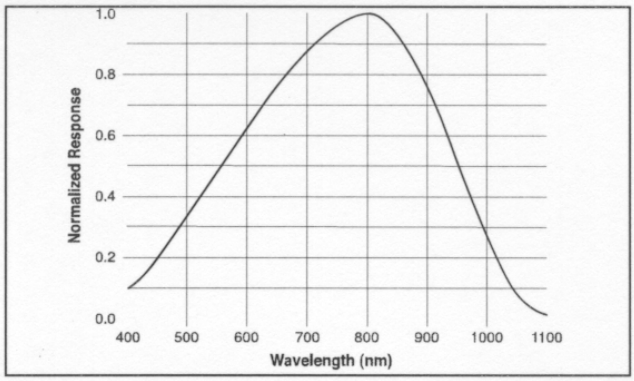

FIGURE 1. Typical detector response versus wavelength.

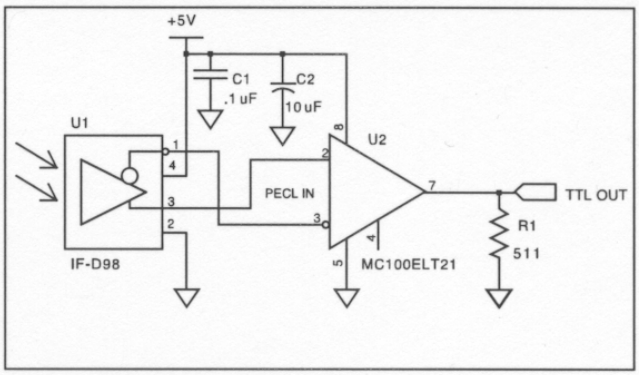

FIGURE 3. Typical interface circuit.

TBD

FIGURE 2. Normalized threshold irradiance vs. amb. temp.

FIBER TERMINATION INSTRUCTIONS

1. Cut off the ends of the optical fiber with a single-edge razor blade or sharp knife. Try to obtain a precise 90-degree angle (square).
2. Insert the fiber through the locking nut and into the connector until the core tip seats against the internal micro-lens.
3. Screw the connector locking nut down to a snug fit, locking the fiber in place.

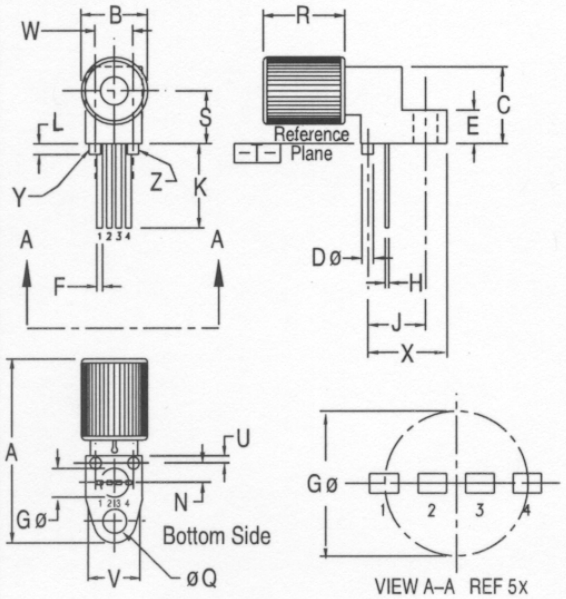

NOTES:
1. Y AND Z ARE DATUM DIMENSIONS AND T IS A DATUM SURFACE.
2. POSITIONAL TOLERANCE FOR D ø (2 PL): ⊕ ø 0.25 (0.010) Ⓜ T Y Ⓜ Z Ⓜ
3. POSITIONAL TOLERANCE FOR F DIM (2 PL): ⊕ 0.25 (0.010) Ⓜ T Y Ⓜ Z Ⓜ
4. POSITIONAL TOLERANCE FOR H DIM (2 PL): ⊕ 0.25 (0.010) Ⓜ T Y Ⓜ Z Ⓜ
5. POSITIONAL TOLERANCE FOR Q ø (2 PL): ⊕ ø 0.25 (0.010) Ⓜ T Y Ⓜ Z Ⓜ
6. POSITIONAL TOLERANCE FOR B (2 PL): ⊕ ø 0.25 (0.010) Ⓜ T
7. DIMENSIONING AND TOLERANCING PER ANSI Y14.5M, 1982.
8. CONTROLLING DIMENSION: INCH

PACKAGE IDENTIFICATION:
- Black housing w/ gold dot
- PIN 1. $\bar{Q}$
- PIN 2. Ground
- PIN 3. Q
- PIN 4. V_{CC}

	MILLIMETERS		INCHES	
DIM	MIN	MAX	MIN	MAX
A	23.24	25.27	.915	.995
B	8.64	9.14	.340	.360
C	9.91	10.41	.390	.410
D	1.52	1.63	.060	.064
E	4.19	4.70	.165	.185
F	0.35	0.51	.014	.020
G	3.81 BSC		.150 BSC	
H	0.18	0.33	.007	.013
J	7.62 BSC		.300 BSC	
K	5.30	6.10	.210	.240
L	1.14	1.65	.045	.065
N	2.54 BSC		.100 BSC	
Q	3.05	3.30	.120	.130
R	10.48	10.99	.413	.433
S	6.98 BSC		.275 BSC	
U	0.83	1.06	.032	.042
V	7.49	7.75	.295	.305
W	5.08 BSC		.200 BSC	
X	10.10	10.68	.397	.427

FIGURE 4. Case outline.

Please visit **www.fiberopticpof.com** to locate a sales representative near you