Mitsubishi International PolymerTrade Corporation

Receivers for use with ESKA™ Products: MIC-D95

Description and Features

The MIC-D95T and MIC-D95OC are high-sensitivity photologic detectors housed in connector-less style plastic fiber optic packages. They contain an IC with a photodiode, linear amplifier and Schmitt trigger logic circuit. The MIC-D95T has a TTL/CMOS-compatible totem-pole output, while the output on the MIC-D95OC is open-collector. These devices can drive up to 5 TTL loads over supply voltages ranging from 4.5 to 16 volts. Optical response extends from 400 to 1100 nm, making them compatible with a wide range of visible and near infrared LED and laser diode sources. The detector package features an internal micro-lens and a precision-molded PBT housing, ensuring efficient coupling with standard 1000µm core plastic fiber cable.

Integrated photodetector, amplifier and Schmitt trigger	Light-tight housing provides interference-free transmission
High optical sensitivity	Requires no optical design
Mates with standard 1000 µm core jacketed plastic fiber optic cable	Internal micro-lens makes for efficient optical coupling
Uses inexpensive, rugged plastic connector housing	Fiber termination is connector-less, thus less expensive

Applications

Highlights

Suitable for digital data links at rates up to 125 kbps, the MIC-D95's integrated design makes it a simple, cost-effective solution in various analog and digital applications. A Schmitt trigger improves noise immunity, while the TTL/CMOS logic compatibility greatly simplifies interfacing with existing digital circuits. The integrated design of the MIC-D95 provides a total, cost-effective solution in a variety of digital applications.

Digital data links	Automotive electronics
PC-to-Peripheral links	Robotics communication
Process control	EMC / EMI signal isolation
Motor controller triggering	Electronic games
Integrated photodetector, amplifier and Schmitt Trigger	Household appliances
Medical instruments	

Characteristics (T_A = 25°C)

Parameters	Symbol	Min	Typ.	Max	Unit
Peak Sensitivity	λ_{PEAK}	--	800	--	nm
Spectral Sensitivity (S=10% of S_{MAX})	$\Delta\lambda$	400	--	1100	nm
Operating Voltage	V_{CC}	4.5	--	16	V
Supply Current	I_{CC}	--	--	12	mA
Light Required to Trigger V_{CC}=5, R_L=1 k, λ=660nm	E_R (+)	--	1.0 (-30)	--	µW (dBm)

Maximum Ratings (T_A = 25˚C)

Temperature Range for Operation and for Storage (T_{OP},T_{STG})	-40˚ to 85˚C
Soldering Temperature (2mm from case bottom) (T_S) t≤5s	240°C
Supply Voltage (V_S)	18V
Voltage at Output Lead (IF-D95OC only)	35V
Sinking Current DC (I_C)	50mA
Source Current (I_O) (IF-D95T only)	10mA
Power Dissipation (P_{TOT}) T_A = 25°C	100mW
De-rate above 25°C	1.33 mW/°C

Parameters	Device		Symbol	Min	Typ.	Max	Unit
High Level Output Voltage	IF-D95T	I_{OH}=–1.0µA	V_{OH}	V_{CC} –2.1	--	--	V
High Level Output Current	IF-D95OC	V_{OH}=30V	I_{OH}	100	--	--	µA
Low Level Output Voltage	IF-D95T	I_{OH}= 16mA	V_{OL}	--	--	0.34	V
	IF-D95OC	I_{OL}= 16mA	V_{OL}	--	--	0.4	V
Output Rise and Fall Times	IF-D95T	f=10.0 kHz, R_L=10 TTL loads	t_r, t_f	--	--	70	ns
	IF-D95OC	f=10.0 kHz, RL=300Ω	t_r, t_f	--	--	100	ns
Propagation Delay: Low-High, High-Low	IF-D95T	f=10.0 kHz, R_L=10 TTL loads	t_{PLH}, t_{PHL}	--	8.0	--	µs
	IF-D95OC	f=10.0 kHz, R_L=300Ω	t_{PLH}, t_{PHL}	--	8.0	--	µs

Mitsubishi International PolymerTrade Corporation

Transmitters for use with ESKA™ Products: MIC-D95

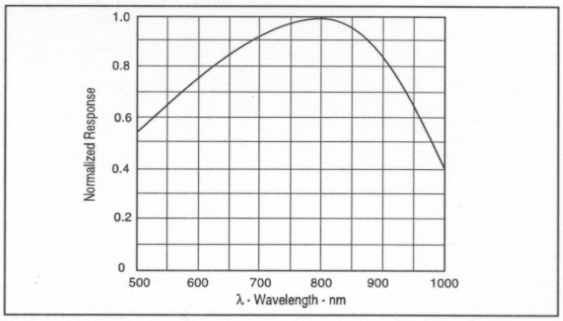

FIGURE 1. Typical detector response versus wavelength.

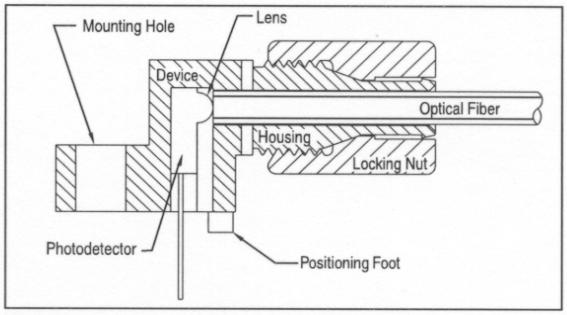

FIGURE 3. Cross-section of fiber optic device.

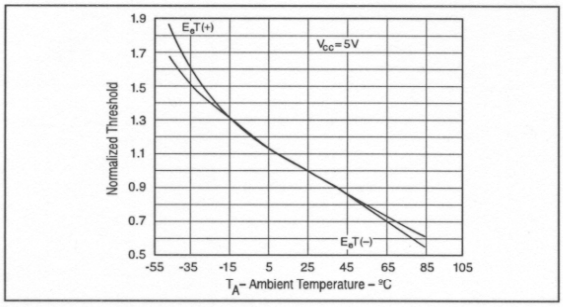

FIGURE 2. Normalized threshold irradiance vs. amb. temp.

FIBER TERMINATION INSTRUCTIONS

1. Cut off the ends of the optical fiber with a single-edge razor blade or sharp knife. Try to obtain a precise 90-degree angle (square).
2. Insert the fiber through the locking nut and into the connector until the core tip seats against the internal micro-lens.
3. Screw the connector locking nut down to a snug fit, locking the fiber in place.

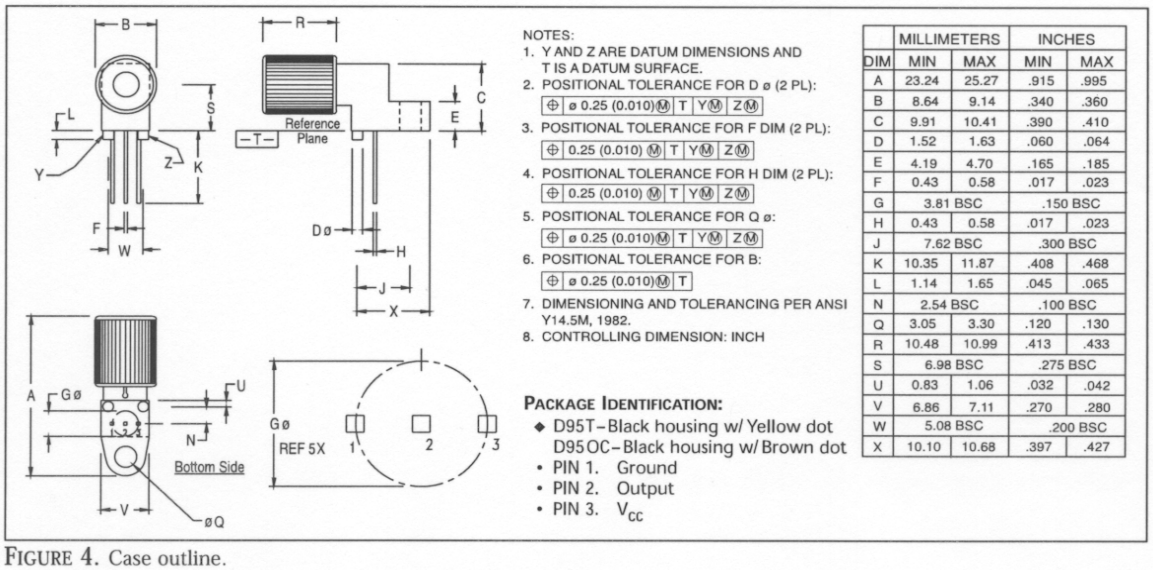

NOTES:
1. Y AND Z ARE DATUM DIMENSIONS AND T IS A DATUM SURFACE.
2. POSITIONAL TOLERANCE FOR D ø (2 PL): ⊕ ø 0.25 (0.010) Ⓜ T Y Ⓜ Z Ⓜ
3. POSITIONAL TOLERANCE FOR F DIM (2 PL): ⊕ 0.25 (0.010) Ⓜ T Y Ⓜ Z Ⓜ
4. POSITIONAL TOLERANCE FOR H DIM (2 PL): ⊕ 0.25 (0.010) Ⓜ T Y Ⓜ Z Ⓜ
5. POSITIONAL TOLERANCE FOR Q ø: ⊕ ø 0.25 (0.010) Ⓜ T Y Ⓜ Z Ⓜ
6. POSITIONAL TOLERANCE FOR B: ⊕ ø 0.25 (0.010) Ⓜ T
7. DIMENSIONING AND TOLERANCING PER ANSI Y14.5M, 1982.
8. CONTROLLING DIMENSION: INCH

PACKAGE IDENTIFICATION:
- D95T – Black housing w/ Yellow dot
  D95OC – Black housing w/ Brown dot
- PIN 1. Ground
- PIN 2. Output
- PIN 3. V_{CC}

	MILLIMETERS		INCHES	
DIM	MIN	MAX	MIN	MAX
A	23.24	25.27	.915	.995
B	8.64	9.14	.340	.360
C	9.91	10.41	.390	.410
D	1.52	1.63	.060	.064
E	4.19	4.70	.165	.185
F	0.43	0.58	.017	.023
G	3.81 BSC		.150 BSC	
H	0.43	0.58	.017	.023
J	7.62 BSC		.300 BSC	
K	10.35	11.87	.408	.468
L	1.14	1.65	.045	.065
N	2.54 BSC		.100 BSC	
Q	3.05	3.30	.120	.130
R	10.48	10.99	.413	.433
S	6.98 BSC		.275 BSC	
U	0.83	1.06	.032	.042
V	6.86	7.11	.270	.280
W	5.08 BSC		.200 BSC	
X	10.10	10.68	.397	.427

FIGURE 4. Case outline.

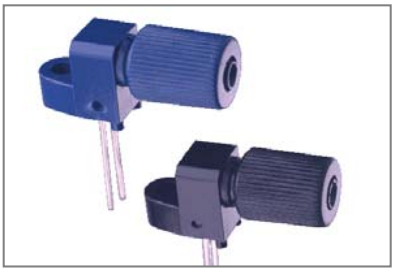

Please visit **www.fiberopticpof.com** to locate a sales representative near you